Solar System Owner's Manual

P&N ROGERS
ELECTRICAL CONTRACTORS

P&N Rogers Electrical Contractors Pty Ltd

Contents Page

1 Introduction

2 Contact Information
- 2.1 Installation Company
- 2.2 Accredited Installer

3 Precautions and warnings
- 3.1 Warning symbols
- 3.2 Important Safety Information

4 Emergency Procedures
- 4.1 Earth Fault Alarm
- 4.2 Shutdown Procedure
- 4.3 Start-Up Procedure

5 System Description
- 5.1 Customer Details
- 5.2 PV System Summary
- 5.3 Components
- 5.4 System Configuration
- 5.5 Component Locations

6 System Performance
- 6.1 Production Estimates
- 6.2 Estimated Savings

7 Connection Diagram

8 Equipment Supplied
- 8.1 Bill of Materials

9 Maintenance Information
- 9.1 Recommended Maintenance Schedule
- 9.2 Information for Maintenance Staff
- 9.3 Cleaning Procedure of Solar Panels

10 Warranty Information

Appendix A: Equipment Documentation

Appendix B: Equipment Manuals

Appendix C: Warranty Documentation

Appendix F: Disclaimers

1 Introduction

Congratulations on your decision to install a Solar Photovoltaic (PV) System with P&N Rogers Electrical Contractors Pty Ltd. Your choice will help reduce greenhouse emissions from conventional fossil fuel generation as well as provide significant savings on your future power bills. We thank you for being a conscientious citizen of the planet.

Please take your time to read and understand the provided Owner Manual. The manual will provide you with important information regarding safety, operation and maintenance of your system.

We **strongly** advise keeping this manual and any additional documents provided in a safe place for future reference.

2 Contact Information

2.1 Installation Company

Business Name	P&N Rogers Electrical Contractors Pty Ltd
ABN	83270753325
Phone number	0246470800
After-hours phone	0246470800
Email	solar@pnrogers.com.au

2.2 Accredited Installer

Name	James Fawbert. Jack Stone. Joshua Croft
Electrical Licence Number	328455C. 401446C. 497211C
SAA Accreditation Number	S6270802. S9339667. S7135239

3 Precautions and Warnings

Your system is designed for automatic operation with no need for user interaction. It is safe when installed and operating correctly. However, given the D.C. and A.C. voltages present in the system, significant inherent dangers still remain.

Please read and understand all safety instructions, warnings and cautions before using the system.

3.1 Warning Symbols

The following symbols will appear in this manual. They are used to indicate potentially hazardous situations where necessary precautions should be taken.

General Safety Warning: Failure to follow recommended procedure could result in injury	Electrical Safety Warning: Failure to follow recommended procedure could result in injury

3.2 Important Safety Information

- Do not attempt to service your system unless you are a licensed electrician and your work is carried out in accordance with local and national electrical codes and standards.
- Any low voltage (LV) work must be undertaken by a suitably licensed electrical worker or contractor. LV is specified in the Australian Standards as any voltage equal to or higher than 50V AC or 120V DC.
- Do not touch any electric components, e.g. wires, connection terminals junction boxes or plug connectors.
- Do not open any components of your system unless adequately licensed to do so.
- We strongly advise against climbing onto the roof to clean or inspect solar panel modules. This should only be done by professionals with appropriate training and safety equipment.
- Observe all safety signage and warnings associated with the system. Ensure these signs remain in place and visible.
- Familiarize yourself with the Shutdown and Start-Up Procedures and Earth Fault Alarm event actions . This involves understanding the relevant components and signage for these emergencies.
- In case of fire, shut down the system if safe to do so. Circuit breakers must remain off until the fire is extinguished.
- Note that a small, non-lethal electrical charge may exist at the base frame or module frames even when the system has been shut down. Inform all necessary roof workers before commencement of works.

4 Emergency Procedures

In the event that a system fault occurs or the system is required to be shut down for maintenance, the following procedures provide immediate actions to be taken.

⚠ WARNING:

Procedures must be followed in the steps listed. Arcing and potential fire may occur if steps are not followed sequentially.

4.1 Earth Fault Alarm

Under normal operating conditions, the DC circuitry of the PV system is insulated from the earth. A system fault that short circuits the DC circuitry of the PV system and earth will activate the Earth Fault Alarm.

The Earth Fault Alarm is broadcasted in some or all of the following ways (depending on your inverter):

- Red LED illuminated on the inverter
- A message displaying "Earth Fault" on the inverter display
- An audible alarm tone from the inverter
- External email alert

Respond immediately with the following course of action:

1. Follow the shut down procedure as described in Section 4.2 Shutdown Procedures of this Owner's Manual.
2. Limit access to all parts of the PV system.
3. Call P&N Rogers Electrical Contractors Pty Ltd on 0246470800 / 0433896768 .
4. Do not re-start the PV system until advised by a qualified SAA installer or P&N Rogers Electrical Contractors Pty Ltd technician.

4.2 Shutdown Procedure

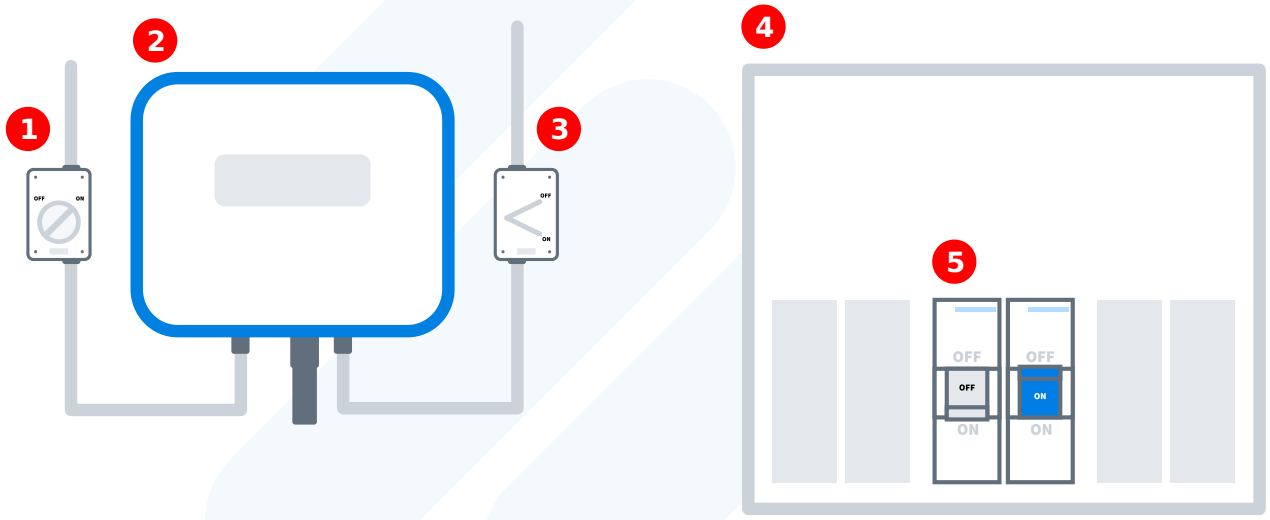

© 2026, Saru Technologies Pty. Ltd. All rights reserved.

Shutdown procedure diagram

Number	Description
1	PV DC Isolator
2	Inverter
3	Inverter AC Isolator
4	Switchboard or Meter box
5	Main Switch (Solar Inverter)

4.2.1 Solar PV and Inverter

Follow these steps in order to completely shut down the solar PV system and isolate the solar array:

1. Locate the **Main Switch (Solar Inverter)** in switch board or meter box. Turn switch **OFF**.
2. Locate the **Inverter A.C. Isolator** adjacent to the inverter (where installed). Turn switch **OFF**.
3. Locate the **PV Array D.C. Isolator** which may be adjacent to or *within* the inverter. Turn switch **OFF**.

⚠ WARNING:

Electrical current may still be present in the system even when the system has been shut down. The system should continue to be treated as live.

⚠ WARNING:

Do not attempt to turn off a solar power system if any of the components of the system are water or storm damaged. Contact your electrician or installer.

4.3 Start-Up Procedure

4.3.1 Solar PV and Inverter

1. Locate the **PV Array D.C. Isolator** which may be adjacent to or *within* the inverter. Turn switch **ON**.
2. Locate the **Inverter A.C. Isolator** adjacent to the inverter. Turn switch **ON**.
3. Locate the **Main Switch (Solar Inverter)** in the switch board or meter box. Turn switch **ON**.

5 System Description

Your installed system is a grid-connected solar photovoltaic (PV) power system. Solar irradiation will be converted to electricity for use on your property. Any additional excess electricity can be exported to the electrical grid.

The following illustration provides an overview of the different parts involved. Refer to Section 5.3 for further information on your component specifications and function.

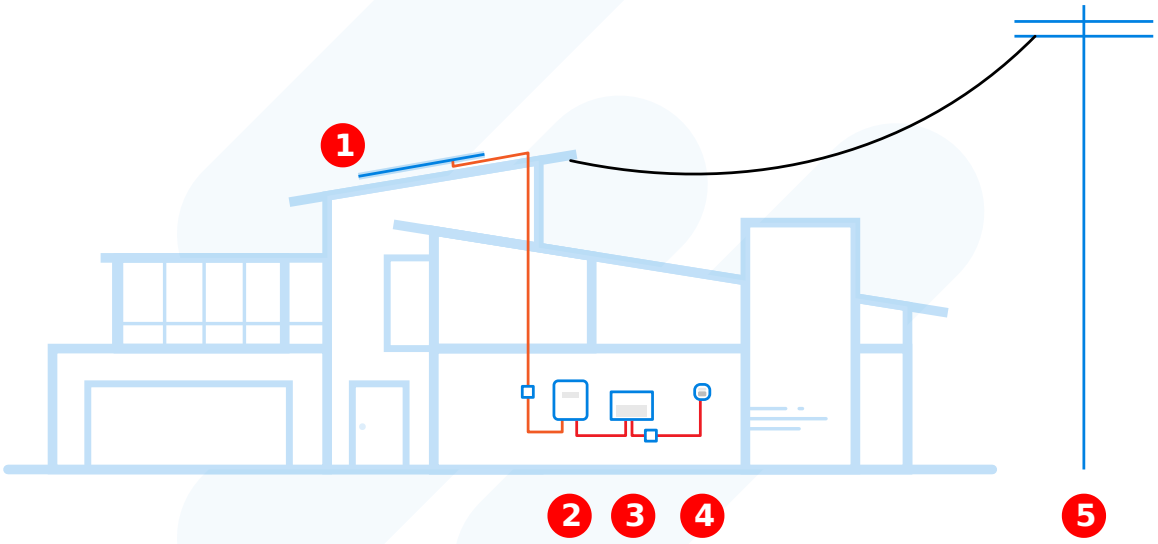

© 2026, Saru Technologies Pty. Ltd. All rights reserved.

Diagram of solar system

Number	Description
1	Solar Panel Array
2	Inverter
3	Switch Board
4	Meter
5	Electricity Network (Grid)

5.1 Customer Details

Address	
Site contact	
Email	
Contact number	
Energy retailer	
DNSP	

5.2 PV System Summary

Type	Grid-connected PV system
Maximum System Output	3.325 kW
Estimated Annual Production	5759 kWh
Panel Module Rating	475W
Inverter Rating	5000W

5.3 Components

5.3.1 Solar PV Modules

Solar PV modules, also known as solar panels, convert solar irradiation (photons) into direct current (DC) electricity. The modules are securely mounted to your roof (see Component Locations) to maximise exposure to sunlight and production of electricity. The wiring configuration for the modules (see System Configuration) is designed to meet the required voltages for your inverter.

Brand	Suntech Power Ultra T 3.0
Model	STP-NT11/48QGDF-475
Power rating	475W
Efficiency	23.8%
Degradation	99% for the first 1 year(s) -0.35% per year to year 30

Detailed specifications of your solar PV modules can be viewed in Appendix A1.

5.3.2 Inverter

The inverter functions to convert direct current (D.C.) electricity from the PV modules to alternating current (A.C.) electricity which is compatible with the electricity supplied to your house from the grid. This is the form of electricity used by your common household appliances.

The A.C. electricity from the inverter is fed into the main switchboard, which in turn is connected to the grid. The inverter manages the electricity generated by the PV modules, using it to meet household demand and exporting any excess supply to the grid .

Brand	GoodWe
Model	GW5K-DNS-G40 (AS4777-2 2020)
AC output power rating	5000W
Efficiency	98.1%

Detailed specifications of your inverter can be viewed in Appendix A2. Refer to the supplied User Manual (Appendix B1) for operating information.

5.3.3 Isolators

Isolators, or switch disconnectors, are manual switching devices used to disconnect (isolate) a certain part of the electrical system. It is important to note that operating an isolator does not completely de-energise the entire system.

AC Isolators

The PV Array A.C. Isolator disconnects the inverter from the A.C. switchboard and subsequently the grid. The AC isolator is installed adjacent to the inverter and should be disconnected first before the DC isolator during shut-down.

Model	Clipsal
AC rated voltage	400 V
AC rated current	40 A

DC Isolators

The PV Array D.C. Isolators disconnects the solar array and stops the supply of electricity from the PV modules to the rest the system. Unless specified otherwise , there will be two DC isolator switches connected for each solar array. One installed adjacent to the inverter and the other close to the solar array. This will allow for access to disconnect the solar array from both the ground and roof levels.

Model	Inverter Integrated
DC rated voltage	1000 V
DC rated current	32 A

5.3.4 Cabling

Specialised cables are used to connect the PV modules to the inverter and then the switchboard. These cables are appropriately marked as solar cables and are insulated or installed in conduit. They will remain safe when well maintained and without mechanical damage. PV system cables should be treated as live even when the system has been shut down appropriately.

Brand	Electra
Model	Solar Twin
Current Rating (A)	40
Voltage Rating (V)	1500
Cable Diameter (mm^2)	4

5.3.5 Electricity Meter

The electricity meter is the device that measures the amount of electric energy consumed by your household. It is used by your electricity retailer for billing purposes. If you have an old electro-mechanical meter (spinning disk meter), your electricity provider will replace this with a bidirectional meter to be able to record electricity both imported and exported. Electrical distributors require that the system remain disconnected until the correct metering is installed and tested.

Electricity exported to the grid will be credited to your bill at your arranged feed-in tariff. Please note that you must contact your electricity retailer to arrange a feed-in tariff contract.

6 System Performance

During daylight hours, your system will generate electricity from the sunlight. The amount of electricity produced will depend on the characteristics of your system and variable factors such as cloud cover, seasonal solar angle variation and shading on your solar array.

6.1 Production Estimates

Weather data at your location has been used to simulate your system's production. The following estimates provide a basis for what you can expect from your system in an average year as a daily average per month.

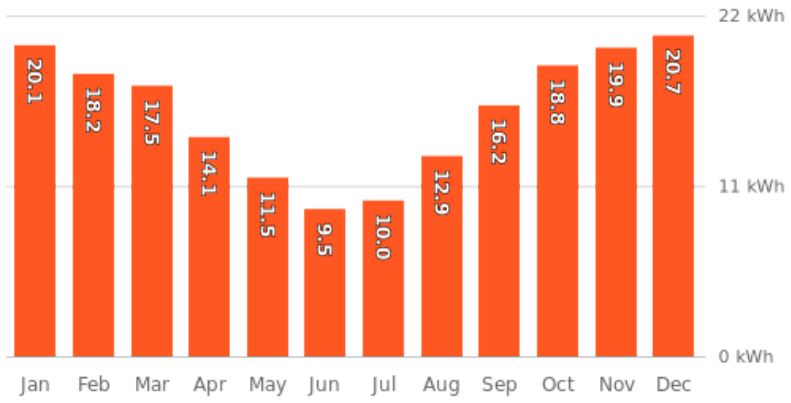

Monthly Production estimate

6.2 Estimated Savings

The electricity produced by your system and consumed will offset the electricity otherwise imported from the grid. This will reduce your electricity bill. Based on your electricity bill and solar system, the following graphs provide a breakdown of your expected savings.

Excess electricity from solar will be exported to the grid and provide credits to your bill.

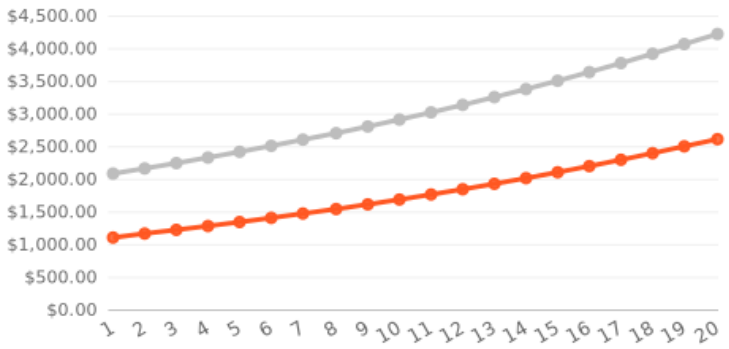

Annual Electricity Bill

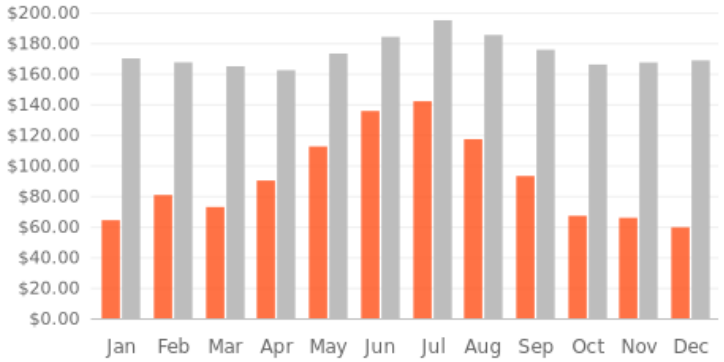

Monthly Electricity Bill Comparison

7 Connection Diagram

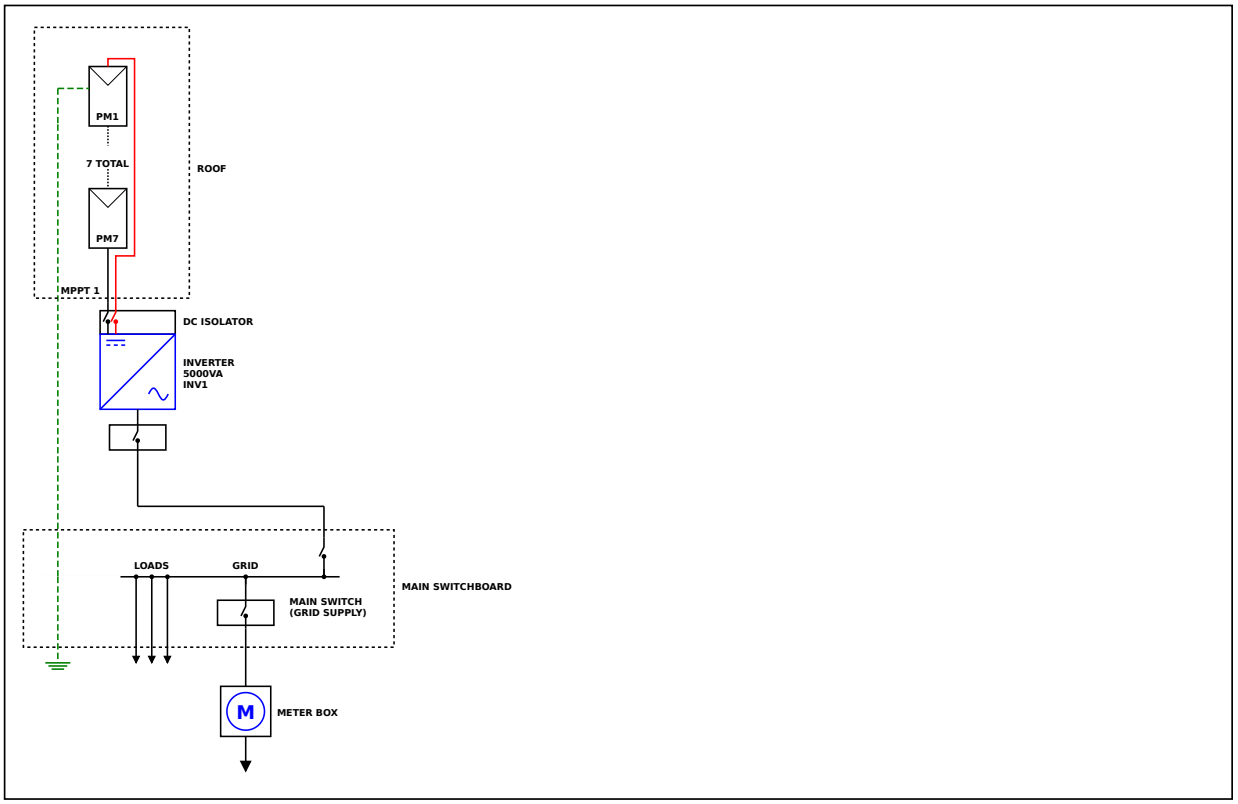

PV MODULES

REF	QTY	MAKE AND MODEL	PMAX	ISC	VOC	IMP	VMP	FUSE RATING
PM1-7	7	SUNTECH POWER STP-NT11/48QGDF-475	475W	16.43A	36.53V	15.62A	30.43V	35A

INVERTERS

REF	QTY	MAKE AND MODEL	APPARENT AC POWER	RATED POWER	MPPTS	MPPT INPUT I	MPPT INPUT V	MAX INPUT V
INV1	1	GOODWE GW5K-DNS-G40 (AS4777-2 2020)	5,000VA	5,000W	2	40/20A	40-560V	600V

8 Equipment Supplied

8.1 Bill of materials

Item	Component type	Brand	Model	Quantity
1	Solar panel	Suntech Power	Ultra T 3.0 STP-NT11/48QGDF-475	7
2	Inverter	GoodWe	GW5K-DNS-G40 (AS4777-2 2020)	1
3	Cable	Electra	Solar Twin	
4	Monitoring	GoodWe	In-Built	1

9 Maintenance Information

Solar PV systems are designed to operate with minimal maintenance. However, performing regular maintenance and inspection will help ensure optimal performance and minimise downtime due to component failure. All maintenance and repair work should be conducted by either your system's installer or another SAA accredited installer.

All works on your system should be recorded in the maintenance log (Section 9.3.1.).

> ⚠ **IMPORTANT:**
>
> Do not attempt to service the system unless you are **fully qualified** to do so.
> Servicing any electrical connection ***MUST*** be done by a licensed electrician.

9.1 Recommended Maintenance Schedule

Australian Standards recommend that your system should be professionally serviced on an annual basis. The following schedule provides a summary of the required actions during maintenance and its recommended frequency. Further maintenance may be advisable according to the component manufacturer's documentation.

Maintenance action	Recommended frequency	Action
Solar PV Modules		
Check for debris around/under PV modules	Quarterly	Clean debris from site
Check trees for shading	Quarterly	Trim trees, if required
Check cleanliness of PV modules	Quarterly	Clean panels – use water at mains pressure.
Visually check PV modules. Defects include: a. Fractures b. Browning c. Moisture penetration d. Frame corrosion	Annually	Further inspection of modules with visual defects for performance and safety issues. Replace modules if required.
Inverter		
Under daylight conditions, check the inverter is operating correctly – Green LED	Weekly	Contact qualified technician where red LED error
For internet connected inverters a. check system operation, data logging and communication on manufacturer's web portal. b. Ensure contact details are up to date for inverter fault notifications to be delivered.	Quarterly	Update contact details. Contact qualified technician in case of fault.
Check that the inverter's ventilation filters and fans are clean	Annually	Clean inverter air intake path.
Wiring installation		
Verify mechanical integrity of conduits	5 years	Replace damaged conduits
Verify insulation of cables installed without conduit	5 years	Replace damaged cables
Test operation of switches	Annually	Replace faulty switches
Check all electrical connections for tightness and corrosion	Annually	Reinstall or replace connections
Check junction boxes: a. Tightness of connections b. Integrity of seals c. Integrity of cable entrances d. Integrity of clamping devices	Annually	Replace defective seals and clamps
Verify blocking diodes	Annually	Replace defective blocking diodes

Maintenance action	Recommended frequency	Action
Where fitted; verify surge arresters for degradation	Annually	Replace defective surge arresters
Electrical characteristics		
Measure and record open circuit voltages	Annually	Record measurement
Measure and record short circuit currents	Annually	Record measurement
Protective devices		
Where fitted, verify integrity of fuse and fuse holders	Annually	
Verify operation of all AC and DC circuit breakers and RCDs	Annually	
Verify operation of solar array isolation devices	Annually	
Verify the function of earth fault protection	Annually	
Mounting system		
Verify tightness and integrity of bolts and other fastening devices	Annually	Replace defective bolts. Tighten clamps as required.
Check for corrosion	Annually	Replace components as required.
Other		
Check labelling is correct and visible	Annually	Rectify as required

⚠ WARNING:

Do not touch or come in contact with a solar module if it is found to be broken or has cracked glass. Contact may result in a fatal electrical shock.

⚠ IMPORTANT:

We recommend using professional services when working at heights.
Personnel must be trained and hold current working at heights certification to conduct maintenance activities on roofs.

9.2 Information for Maintenance Staff

The following information serves as a reminder and should not be taken as substitute for professional training. Workplace health and safety regulations and PV installation codes and regulations precede information provided in this manual and should be adhered in all cases.

DISCLAIMER OF LIABILITY:

Despite the instructions and recommends provided in this manual, the actual use and maintenance of the PV system is beyond the control of P&N Rogers Electrical Contractors Pty Ltd.

9.2.1 Safety Information

A risk assessment of possible hazards should be completed prior to the start of any maintenance work. All necessary precautions should be taken to eliminate or reduce risks involved.

Electricity to the property should be turned off and isolated at the main switchboard. Steps should also be taken to prevent the electricity to be turned on whilst work is in progress; consider use of a safety tag and lockout.

Working at heights

Working at heights is works in any place where a persons could be injured from a fall. Consideration for the surface pitch should be taken when assessing risks.

- All workers conduct activities at height must have the appropriate working at heights training and qualification.
- Personal protective equipment (PPE) for working at heights should be worn.
- Minimise risks of a fall from heights by having fall prevention controls in place (e.g. edge protection or harness).
- Ladders must extend above the exit landing by at least 1.0 metre and should be set at the correct angle with secure footing. Ladder should only be used for access and not to work off.

Wear head protection Wear foot protection Wear protective gloves Wear high visibility clothing Wear a safety harness

Working in Ceiling Spaces

Roof cavities or ceiling spaces pose major risks due to their environmental conditions and the presence of electrical works.

- Complete a pre-work risks assessment of the roof cavity by inspecting the ceiling space to identify hazards such as excessive heat, lack of ventilation, dangerous vermin, sharp objects of asbestos-containing materials
- Wear appropriate safety equipment
  - P1 or P2 face masks that meet Australian Standards AS/NZS 1716
  - Appropriate gloves and footwear
  - Long sleeved, loose-fitting clothes
- Make sure not to come in contact with, or damage, any electrical cables or equipment

Electrical Risks

Grid-connected solar PV systems are electrical systems that produce potentially deadly voltages and are connected to mains power.

- We strongly recommend the use of opaque material to cover the solar PV modules prior to maintenance work being conducted.
- DC voltages can kill or cause serious injury. Even when the system is completely isolated and all the circuit breakers are switched off there could still be DC voltages present across the solar modules.

9.2.2 Controlling Risks

The following table guide to controlling high-risks hazards associated with servicing solar PV systems. Consideration for each hazard and control measures should be taken before work commences.

Hazard	Risks	Control Measures
Working at heights	• Falling from ladder • Falling from rooftop • Falling through ceiling space • Falling objects injuring persons below	**Engineer**: Install scaffolding around roof top with stair access **Engineer**: Skylights/brittle roofs to be barricaded or suitable protective overlay provided **Substitute**: Do not access in inclement weather conditions **PPE**: Use fall restraint techniques **PPE**: All tools and accessories to be securely tethered to workmen
Working in ceiling spaces	• Contact with energised conductors • Exposure to poor air quality and harmful substances • Exposure to extreme heat • Contact with vermin, snakes, spiders and insects	**Eliminate**: Conduct necessary checks without entering ceiling spaces **Isolate**: Turn off all electricity to the property at the main switchboard. Take steps to prevent electricity from being turned back on whilst work is in progress **PPE**: Wear appropriate, fitted and well maintained personal protective equipment when working in spaces confined spaces with poor air quality, including: • Respirator • Head covering and goggles • Long-sleeved, loose-fitting clothing and gloves
Working with and installing electrical equipment	• Contact with energised conductors • Accidental short circuit	**Eliminate**: Conduct necessary checks without entering ceiling spaces **Isolate**: Turn off all electricity to the property at the main switchboard. Take steps to prevent electricity from being turned back on whilst work is in progress **PPE**: Wear appropriate, fitted and well maintained personal protective equipment when working in spaces confined spaces with poor air quality, including: • Respirator • Head covering and goggles • Long-sleeved, loose-fitting clothing and gloves
Working outdoors	• Exposure to sun	**Eliminate**: Schedule works outdoor before 10am and after 3pm **Substitute**: Rotating tasks that involve direct sun exposure **PPE**: Wear SPF 30+ clothing and sunscreen

9.3 Cleaning Procedure of Solar Panels

This document is intended to be a guide for safe cleaning Solar PV Modules and should be used in conjunction with internal Operational Health and Safety (OH&S) and Safe Work Method Statement (SWMS).

Equipment Required	• Roofing harness • Soft bristle brush • Lambswool applicator • Window squeegee • Sponge • Hose
Electrical shutdown	Follow the shutdown procedure in Section 4.2
Procedure	1. Focus on cleaning a small area at a time. The roof may become slippery when wet. 2. Where possible, dry the solar pv module with a window squeegee once it has been cleaned to remove all residual dirt.

⚠ **WARNING:**

Solar panels are fragile and can be broken during cleaning. Please do not engage in any of the following activities whilst cleaning your system.

Things to avoid:

- Do **not** use chemicals, detergents or bleaches as cleaning agents.
- Do **not** use mechanical cleaning equipment such as scrappers, blades or steel wool.
- Do **not** aim high pressure water directly towards a panel.
- Do **not** stand on modules during cleaning.
- Do **not** wash AC and DC switchgear.

9.4 Maintenance Logs

9.4.1 Maintenance Lifetime Log

All maintenance procedures conducted on the system should be recorded in the following log book. Modifications to the system should also be recorded accordingly.

Date/time	Company	Name of technician	Action taken and comments

9.4.2 Maintenance Logbook

The following checklist provides a basis for SAA approved technicians to conduct general maintenance. Additional maintenance checks and procedures may be necessary for different systems designs and components.

Maintenance Checklist 1

Maintenance Action	Check	Action taken to rectify/comments
Solar PV Modules		
Check for debris around/under PV modules	☐	
Check trees for shading	☐	
Visually check PV modules for defects	☐	
Check trees for shading	☐	
Verify bypass diodes	☐	
Inverters		
Check inverter operating correctly	☐	
Check inverter's ventilation filters and fans are clean	☐	
Wiring installation		
Verify mechanical integrity of conduits	☐	
Verifying insulation of cables installed without conduit	☐	
Test operation of switches	☐	
Check all electrical connections for tightness and corrosion	☐	
Check integrity of junction boxes and connections	☐	
Verify blocking diodes Verify surge arrestors for degradation	☐	
Verify surge arrestors for degradation	☐	
Electrical characteristics		
Measure and record open circuit voltages	V	
Measure and record short circuit currents	A	
Protective devices		
Verify integrity of fuse and fuse holders	☐	
Verify operation of AC and DC circuit breakers and RCDs	☐	
Verify operation of solar array isolation devices	☐	
Verify the function of earth fault protection	☐	
Mounting system		
Verify tightness and integrity of bolts and other fastening devices	☐	

SAA Accredited Technician:

SAA Accreditation Number:

Date tested:

Signature:

Maintenance Checklist 1

Maintenance Action	Check	Action taken to rectify/comments
Solar PV Modules		
Check for corrosion	☐	
Other		
Check required labelling is correct and visible	☐	

SAA Accredited Technician:

SAA Accreditation Number:

Date tested:

Signature:

Maintenance Checklist 2

Maintenance Action	Check	Action taken to rectify/comments
Solar PV Modules		
Check for debris around/under PV modules	☐	
Check trees for shading	☐	
Visually check PV modules for defects	☐	
Check trees for shading	☐	
Verify bypass diodes	☐	
Inverters		
Check inverter operating correctly	☐	
Check inverter's ventilation filters and fans are clean	☐	
Wiring installation		
Verify mechanical integrity of conduits	☐	
Verifying insulation of cables installed without conduit	☐	
Test operation of switches	☐	
Check all electrical connections for tightness and corrosion	☐	
Check integrity of junction boxes and connections	☐	
Verify blocking diodes Verify surge arrestors for degradation	☐	
Verify surge arrestors for degradation	☐	
Electrical characteristics		
Measure and record open circuit voltages	V	
Measure and record short circuit currents	A	
Protective devices		
Verify integrity of fuse and fuse holders	☐	
Verify operation of AC and DC circuit breakers and RCDs	☐	
Verify operation of solar array isolation devices	☐	
Verify the function of earth fault protection	☐	
Mounting system		
Verify tightness and integrity of bolts and other fastening devices	☐	

SAA Accredited Technician:

SAA Accreditation Number:

Date tested:

Signature:

Maintenance Checklist 2

Maintenance Action	Check	Action taken to rectify/comments
Solar PV Modules		
Check for corrosion	☐	
Other		
Check required labelling is correct and visible	☐	

SAA Accredited Technician:

SAA Accreditation Number:

Date tested:

Signature:

Maintenance Checklist 3

Maintenance Action	Check	Action taken to rectify/comments
Solar PV Modules		
Check for debris around/under PV modules	☐	
Check trees for shading	☐	
Visually check PV modules for defects	☐	
Check trees for shading	☐	
Verify bypass diodes	☐	
Inverters		
Check inverter operating correctly	☐	
Check inverter's ventilation filters and fans are clean	☐	
Wiring installation		
Verify mechanical integrity of conduits	☐	
Verifying insulation of cables installed without conduit	☐	
Test operation of switches	☐	
Check all electrical connections for tightness and corrosion	☐	
Check integrity of junction boxes and connections	☐	
Verify blocking diodes Verify surge arrestors for degradation	☐	
Verify surge arrestors for degradation	☐	
Electrical characteristics		
Measure and record open circuit voltages	V	
Measure and record short circuit currents	A	
Protective devices		
Verify integrity of fuse and fuse holders	☐	
Verify operation of AC and DC circuit breakers and RCDs	☐	
Verify operation of solar array isolation devices	☐	
Verify the function of earth fault protection	☐	
Mounting system		
Verify tightness and integrity of bolts and other fastening devices	☐	

SAA Accredited Technician:

SAA Accreditation Number:

Date tested:

Signature:

Maintenance Checklist 3

Maintenance Action	Check	Action taken to rectify/comments
Solar PV Modules		
Check for corrosion	☐	
Other		
Check required labelling is correct and visible	☐	

SAA Accredited Technician:

SAA Accreditation Number:

Date tested:

Signature:

11 Warranty Information

Warranty on your system consists of the warranty provided by and the component manufacturer's warranty. Please read all necessary attached documents regarding the conditions and exclusion terms of the warranties. For further information, refer to manufacturer's websites.

11.1 Installer Warranty

Company name:	The Trustee for P & N ROGERS UNIT TRUST
Business name:	P&N Rogers Electrical Contractors Pty Ltd
ABN:	83270753325
Workmanship Warranty:	2 years

11.2 Solar PV Modules Warranty

PV Module manufacturer:	Suntech Power
PV Module model:	STP-NT11/48QGDF-475
Warranty on manufacturing:	25
Warranty on output:	30

Conditions of Suntech Power warranty can be found in Appendix C1.

11.3 Inverter Warranty

Inverter manufacturer:	GoodWe
Inverter model:	GW5K-DNS-G40 (AS4777-2 2020)
Warranty:	5 years

Conditions of GoodWe warranty can be found in Appendix C2.

Appendix A – Equipment Datasheet

Appendix A1 – Solar PV Module Datasheet

Suntech Power · STP-NT11/48QGDF-475

Appendix A2 – Inverter Datasheet

GoodWe · GW5K-DNS-G40 (AS4777-2 2020)

Appendix B – Equipment Manual

Appendix B1 – Inverter User Manual

GoodWe GW5K-DNS-G40 (AS4777-2 2020)

Unavailable, please refer to manufacturer website

Appendix C – Warranty Documentation

C1 – Solar PV Module Warranty Documentation

Suntech Power · STP-NT11/48QGDF-475

C2 – Inverter Warranty Documentation

GoodWe · GW5K-DNS-G40 (AS4777-2 2020)

Appendix F – Disclaimers

F1 – User Manual

The following user manual produced by Pylon is designed to be compliant with Australian Standards AS/NZS 5033:2014 under the Renewable Energy (Electricity) Act 2000 AG and fulfil SAA Guidelines in relation to documentation. It is the responsibility of the SAA approved designer to fully complete all necessary sections to ensure compliance.

F2 – Performance Estimate

Energy Output is calculated based on historical solar irradiance at the given location. A typical meteorological year is selected using statistical methods. Factors including panel tilt, orientation (azimuth), and system efficiency are taken into account.

The system design may change based on a detailed site audit. Estimated savings are based on past electrical usage and utility rates provided by the customer. Actual system production and savings will vary based on final system design, configuration, utility rates, applicable subsidies and your energy usage post-solar installation. Utility rates, charges and fee structures imposed by your utility are not affected by this proposal and are subject to change in the future at the discretion of your utility. The production calculations in this report are based on historical climate data for the site location and represent typical estimates of future solar production.

F3 – Copyright

This publication is copyright. No part may be reproduced by any process except in accordance with the provisions of the Copyright Act 1968. This manual is intended to be a source of information only. Always refer to the manufacturer's manual before using any of the products mentioned. Follow all relevant safety requirements and laws of your state or territory. Pylon and P&N Rogers Electrical Contractors Pty Ltd do not guarantee that the manual is without flaw or appropriate for your particular purposes and therefore disclaims all liability for any losses or other consequences which may arise from you relying on any information in this manual.